Design No. G556

June 11, 2021

Unrestrained Assembly Rating — 1, 1-1/2 and 2 Hr (See Item 1)
This design was evaluated using a load design method other than the Limit States Design Method (e.g., Working Stress Design Method). For jurisdictions employing the Limit States Design Method, such as Canada, a load restriction factor shall be used — See Guide BXUV or BXUV7

*** Indicates such products shall bear the UL or cUL Certification Mark for jurisdictions employing the UL or cUL Certification (such as Canada), respectively.**

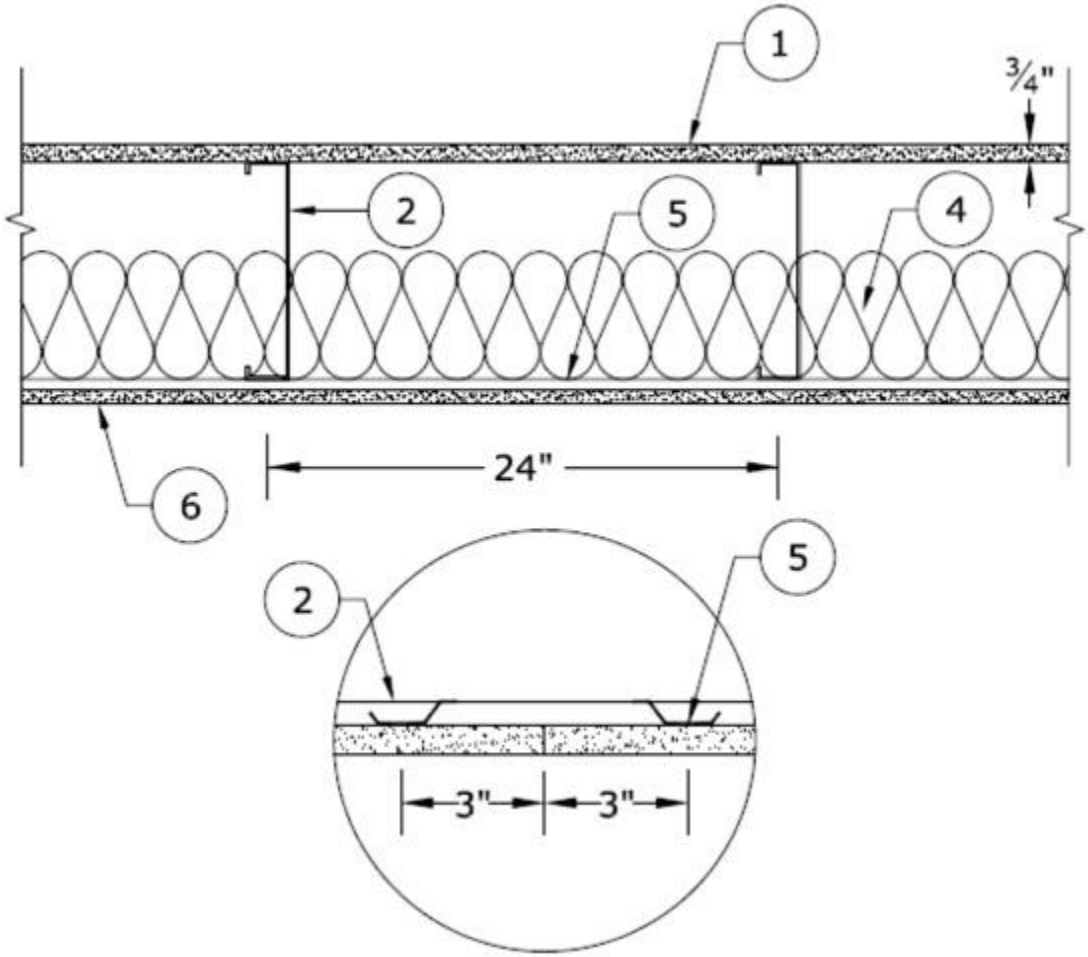

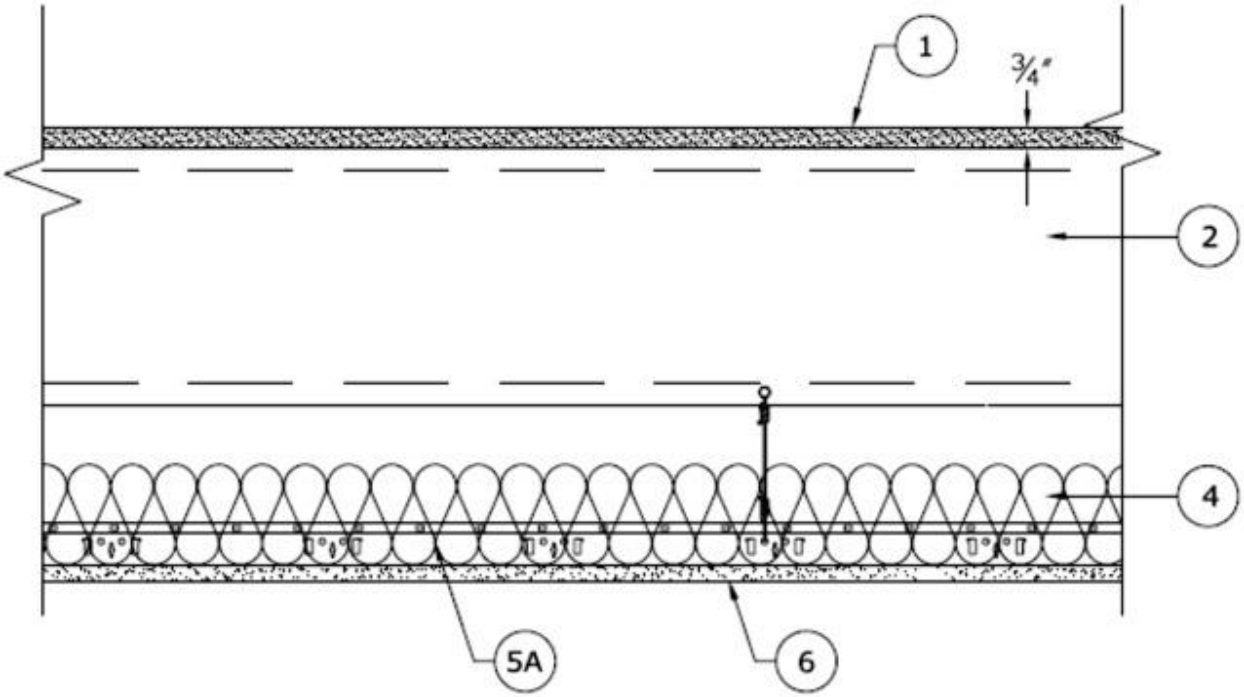

1. **Flooring System —**

1 or 1-1/2 Hr Rating

1A. Structural Cement-Fiber Units* — Nom 3/4 in. thick, with long edges tongue and grooved. Long dimension of panels to be perpendicular to joists with end joints staggered a min of 2 ft and centered over the joists. Panels secured to steel joists with 1-5/8 in. long No. 8 self-drilling, self-countersinking steel screws spaced a max of 12 in. OC in the field with a screw located 1 in. and 2 in. from each edge, and 8 in. OC on the perimeter with a screw located 2 in. from each edge, located 1/2 in. from the side edges of the panel.

As an alternate to the 1-5/8" long No. 8 fastener, the following power-actuated pins may be used for min. 1/8" thick, hot-rolled A36 steel sections for joist specified in Item 2I:

Hilti pin model X-U 32MX with a min. 0.157" shank diameter min. 1-1/4" long, DeWalt pin model 50458-PWR with a min. 0.157" shank diameter min. 1-1/4" long or Aerosmith model 5324HPG with a min. 0.145 shank diameter min. 1-1/4" long.

Unrestrained Assembly Rating is 1 hour when Item 2A or 2B is used. Unrestrained Assembly Rating is 1-1/2 hour when Item 2 is used.

UNITED STATES GYPSUM CO — Types STRUCTO-CRETE, USGSP

2 Hr Rating
System A

1A. **Structural Cement-Fiber Units* —** Nom 3/4 in. thick, with long edges tongue and grooved. Long dimension of panels to be perpendicular to joists with end joints staggered a min of 2 ft and centered over the joists. Panels secured to steel joists with 1-5/8 in. long No. 8 self-drilling, self-countersinking steel screws spaced a max of 12 in. OC in the field with a screw located 1 in. and 2 in. from each edge, and 8 in. OC on the perimeter with a screw located 2 in. from each edge, located 1/2 in. from the side edges of the panel.

As an alternate to the 1-5/8" long No. 8 fastener, the following power-actuated pins may be used for min. 1/8" thick, hot-rolled A36 steel sections for joist specified in Item 2I:

Hilti pin model X-U 32MX with a min. 0.157" shank diameter min. 1-1/4" long, DeWalt pin model 50458-PWR with a min. 0.157" shank diameter min. 1-1/4" long or Aerosmith model 5324HPG with a min. 0.145 shank diameter min. 1-1/4" long.

UNITED STATES GYPSUM CO — Types STRUCTO-CRETE, USGSP

1B. **Gypsum Board* (Not Shown) —** Min 1/4 in. thick, 4 ft by 4 ft gypsum board underlayment, Classified as to Surface Burning Characteristics. Bonded and attached to Structural Cement Fiber Unites (Item 1A) with a mortar applied with a 1/4 in. by 1/4 in. notched trowel, and 1-1/4 in. long coarse thread screws spaced max 8 in. OC. Joints between Structural Cement Fiber Units and of Gypsum Board staggered a min of 6 in.
UNITED STATES GYPSUM CO — Type FRX-G

1C. **Floor Mat Materials* —** (Optional) — Floor mat material loosely laid over Structural Cement-Fiber Units (Item 1A). Gypsum Board Item 1B loosely laid over floor mat material with joints of bottom layer of Gypsum Board staggered a minimum of 12 in. in both directions.
KINETICS NOISE CONTROL INC — Type Soundmatt

PLITEQ INC — Types GenieMat RST02, GenieMat RST05

System B

1A. **Structural Cement-Fiber Units* —** Nom 3/4 in. thick, with long edges tongue and grooved. Long dimension of panels to be perpendicular to joists with end joints staggered a min of 2 ft and centered over the joists. Panels secured to steel joists with 1-5/8 in. long No. 8 self-drilling, self-countersinking steel screws spaced a max of 12 in. OC in the field with a screw located 1 in. and 2 in. from each edge, and 8 in. OC on the perimeter with a screw located 2 in. from each edge, located 1/2 in. from the side edges of the panel.
As an alternate to the 1-5/8" long No. 8 fastener, the following power-actuated pins may be used for min. 1/8" thick, hot-rolled A36 steel sections for joist specified in Item 2I:

Hilti pin model X-U 32MX with a min. 0.157" shank diameter min. 1-1/4" long, DeWalt pin model 50458-PWR with a min. 0.157" shank diameter min. 1-1/4" long or Aerosmith model 5324HPG with a min. 0.145 shank diameter min. 1-1/4" long.

UNITED STATES GYPSUM CO — Types STRUCTO-CRETE, USGSP

1B. **Floor Topping Mixture* —** Min 3/4 in. thickness of floor topping mixture having a minimum compressive strength of 1800 psi. Refer to manufacturer's instructions accompanying the material for specific mix design.
UNITED STATES GYPSUM CO — Types LRK, HSLRK, CSD

USG MEXICO S A DE C V — Types LRK, HSLRK, CSD

Floor Mat Materials* — (Optional) - Floor mat material loose laid over the subfloor. Refer to manufacturer's instructions regarding the minimum thickness of floor topping over each floor mat material.

UNITED STATES GYPSUM CO — Types SAM, LEVELROCK® Brand Sound Reduction Board, LEVELROCK® Brand Floor Underlayment SRM-25

Alternate Floor Mat Materials* — (Optional) - Floor mat material nom 3/8 in. thick loose laid over the subfloor. Floor topping thickness a min 3/4 in. over the floor mat.
GRASSWORX L L C — Type SC50

2. **Steel Joists —** Channel-shaped, min 10 in. deep with min 1-5/8 in. wide flanges and 1/2 in. long stiffening flanges. Fabricated from min No. 16 MSG galv steel. Min yield strength of 50,000 psi. Joists spaced max 24 in. OC. Supplied with appropriate rim tracks of same size and gauge.

2A. **Steel Joists —** (Not Shown) -As an alternate to Item 2 - For maximum clear spans not exceeded 8 ft. Channel-shaped, min 6 in. deep with min 1-9/16 in. wide flanges and 3/8 in. long stiffening flanges. Fabricated from min No. 18 MSG galv steel. Min yield strength of 33,000 psi. Joists spaced max 24 in. OC. Supplied with appropriate rim tracks of same size and gauge.

2B. **Steel Joists —** (Not Shown) -As an alternate to Item 2 - Channel-shaped, min 8 in. deep with min 1-9/16 in. wide flanges and 3/8 in. long stiffening flanges. Fabricated from min No. 16 MSG galv steel. Min yield strength of 33,000 psi. Joists spaced max 24 in. OC. Supplied with appropriate rim tracks of same size and gauge.

2C. **Steel Joists —** As an alternate to item 2 only - The joists are channel-shaped, 10 in. min depth. Joists are fabricated from min No. 16 MSG galv steel. Joists spaced max 24 in. OC. Joists attached to rim joist with a minimum of three #10 3/4 in. long self-drilling screws at the rim track clip to the outside of the web joist, and a #10 1/2 in. long screw through the top and bottom flange of the joists to the top and bottom flange of the rim track. At rim joist splices bearing on supports, rim joists are connected using an overlapping section of a 12 in. long splice plate (a joist piece), with a minimum of six 3/4 in. long self-drilling #10 screws to each rim piece. For use with item 3C.
CALIFORNIA EXPANDED METAL PRODUCTS CO — Type SSCJ floor joists, SSRT rim joists or Type SSTT rim joists. When Type SSTT rim joists are used, secured to preformed clip tabs in accordance with manufacturers installation instructions.

2D. **Clip Angles —** No. 16 MSG, 9-3/4 in. long steel angles with 2 in. legs. Secured to track and joist with eight No.10, 3/4 in. long, self drilling, hex head screws, located 1 in. from each end of clip angle, with the other two screws on each leg evenly spaced. Only one clip angle per joist end.

2E. **Clip Angles —** (Not Shown) - As an alternate to Item 2C, for use with 6 or 8 in. deep joists (Item 2A or 2B). No. 16 MSG, 5-1/2 in. long steel angles with 1-1/2 in. legs for 6 in. deep joists and No. 18 MSG, 7-1/4 in. long steel angles with 1-1/2 in. legs for 8 in. deep joists. Secured to track and joist with six No.10, 3/4 in. long, self drilling, hex head screws, located 1 in. from each end of the clip angle and at the centerline. Only one clip angle per joist end.

2F. **Structural Steel Members* —** (Not Shown) - As an alternate to Item 2, 2a, 2b and 2c - Pre-fabricated light gauge steel truss system consisting of cold-formed, galv steel chord and web sections. Trusses fabricated in various sizes, depths and from various steel thickness spaced a maximum of 24 in. OC.
AEGIS METAL FRAMING, DIV OF MITEK — Ultra-Span, Pre-fabricated Light Gauge Steel Truss System

TRUSSTEEL, DIV OF ITW BUILDING COMPONENTS INC — TrusSteel

2G. **Structural Steel Members* —** (Not Shown) - As an alternate to Item 2, 2a, 2b,2c and 2f - Pre-fabricated steel truss system consisting of cold-formed, galvanized steel chord and web sections. Truss top and bottom chords min. 4 in. high by 1-11/16 in. wide by 18 ga. Truss webs min. 1-1/2 in. by 1-1/2 in. by 20 ga. square tube bent and triangulated as shown. Chords and web connected by fillet welds. Overall truss depth min. 12 in. Trusses spaced a max of 24 in. OC. Truss ends placed over and secured to Bearing Seats (Item 2G1) with two min. #10 by 3/4 in. long screws on each side of Bearing Seats. Allowable loading must be calculated so as to stress the steel trusses to a maximum of 98% of the stress calculated in accordance with the allowable stress design approach outlined in the manufacturer's load tables.
EISEN PANEL SYSTEMS L L C — Type Gateway Panel pre-fabricated steel truss system.

2G1. **Bearing Seats* —** (Not Shown) — Galvanized steel tube, min. 1 in. by 2-1/2 in. by 13 ga., oriented vertically and welded to min. 4 in. by 4 in. by 10 ga., galvanized steel plate. Bearing seats spaced 24 in. OC and attached to bearing supports by welding or screw attaching the steel plate to the bearing supports.

EISEN PANEL SYSTEMS L L C — Type Gateway Panel bearing seat.

2G2. **Bracing —** (Not Shown) - For use with Item 2G — Galvanized channel-shaped steel sections, min. 1-1/2 in. wide with 1/4 in. flanges, min. 16 ga. Bracing attached to underside of trusses with min. #10 by 3/4 in. long screws through truss bottom chord. Bracing installed in truss cavities by scoring, bending and flattening the ends to form a tab for attachment to truss top and bottom chords. Two pieces of bracing crossed and tabs secured to truss chords with min. #10 by 3/4 in. long screws. Location and spacing of underside and crossed bracing to be specified on truss engineering.

2H. **Steel Trusses —** As an alternate to Items 2, 2A, 2B, 2C, 2F and 2G - Cold-formed galvanized steel truss chord and web sections manufactured from steel conforming to ASTM A653 Grade 33 or higher yield strength. Steel thickness of truss chord and web sections as required by design to meet governing code requirements. Truss members connected together with No. 10-16 (min size) self-drilling screws or equivalent. Truss chord and web members to be designed in accordance with the American Iron and Steel Institute's Specification for the Design of Cold-Formed Steel Structural Members, 1996 Edition. Trusses spaced a max of 24 in. OC. Where the truss intersects with the interior face of the exterior walls, the min truss depth shall be 12 in.

2I. **Steel Joists —** As an alternate to Items 2, 2A, 2B, 2C, 2F, 2G and 2H, minimum 12K1, spaced a max 24 in. OC.

2J. **Structural Steel Members* —** As an alternate to Item 2 - Limited to the 1 Hour Ratings. Pre-fabricated light gauge steel truss system consisting of cold-formed, galv steel cord and web sections. Trusses fabricated in various sizes, depths and from various steel thickness. Trusses spaced a max of 24 in. OC. Location of lateral bracing for truss chord and web sections to be specified on truss engineering.
TRUSS LINK INC — Truss Link

3. **Joist Bridging —** (Not Shown) - For use with Item 2 and 2B - Installed immediately after joists are erected and before construction loads are applied. The bridging consisting of joist sections cut to length and placed between outer supports, adjacent to openings and at mid span with 8 ft OC max spacing. Bridging channels are screw-attached at each end to joist web using angle clips. V-bracing of 1-1/2 in. by 20-ga galvanized steel is screw-attached to bottom joist flange between bridging channels.

3A. **Joist Bridging —** (Not Shown) - For use with Item 2A - Installed immediately after joists are erected and before construction loads are applied. The bridging consisting of rim track sections cut to length, with two 4 in. long folded back flanges, and placed between outer supports, adjacent to openings and at mid span with 10 ft OC max spacing. Bridging channels are screw-attached to each of the four top and bottom joist flanges with two No. 8 by 1/2 in. long wafer head steel screws.

3B. **Joist Bridging —** (Not Shown) - For use with Item 2A and 2B - 1-1/2 in. wide strips formed from 20 MSG - The structural bridging is installed perpendicular to and on the bottom surface of the joists at mid-span with one #10 x 3/4 in. long hex head steel screw at each interface.

3C. **Joist Bridging —** Not shown — For use with item 2C. Installed immediately after joists are erected and before construction loads are applied. The structural bridging, Type CEMCO Sure Bridging, consisting of No. 18 MSG galv steel, 2-1/2 in. wide by 25-1/2 in. long with 1-5/16 in. long legs structural bridging staggered between the steel joists and attached to the bottom joist flange with two #10 1/2 in. long self-drilling screws at each end tab of bridging. Solid bridging consisting of cut to length joist sections placed between outer joists and at center joist with 8 ft OC max spacing. Solid bridging is seated in the structural bridging and is screw-attached at joist web using Type CEMCO Sure-Support Clips (1-1/2 in. by 1-1/2 in. by 7 in. long, 16 MSG, min 50 ksi support clip) with three #10 3/4 in. long self-drilling screws per leg on one side and the other side with Type CEMCO Sure-Support Clips (4 in. by 1-1/2 in. by 7 in. long, 16 MSG, min 50 ksi support clip) with three #10 3/4 in. long self-drilling screws per leg.

3D. **Bridging —** (Not Shown)—For use with Item 2F - Location of lateral bracing for truss chord and web sections to be specified on truss engineering.

4. **Batts and Blankets* —** 3-5/8 in. thick glass fiber batt insulation draped over the resilient channels (Item 5) or suspension system grid (Item 5A). Any glass fiber batt insulation bearing the UL Classification Marking for Surface Burning Characteristics having a flame spread index of 25 or less and a smoke developed index of 50 or less may be used. See **Batts and Blankets** (BKNV) category in the Building Materials Directory for names of manufacturers.

5. **Resilient Channels —** Formed of No. 25 MSG galv steel, 1/2 in. deep, spaced max 12 in. OC, perpendicular to joists. Channel splices located beneath joists and overlapped 4 in. Channels secured to each joist with one 1/2 in. long Type S-12 low profile steel screw. Two channels, spaced 6 in. OC, oriented opposite each gypsum board end joint as shown on the illustration above. Additional channels shall extend min 6 in. beyond each side edge of board.

5A. **Steel Framing Members* —** (Optional, Not Shown) — When it is desired to drop the ceiling below the bottom plane of the structural steel members (Item 2), a suspension system may be used in lieu of the resilient channels. Main runners, cross tees, cross channels and wall angle as listed below:

a. **Main Runners —** Nom 10 or 12 ft long , 15/16 in. or 1-1/2 in. wide face, spaced 4 ft. OC. Main runners suspended by min 12 SWG galv steel hanger wires spaced 24 in. OC a min of 4 in. below bottom flange of joists, twist tied to #10 - 3/4 in. long screws installed in the web, 1/2 in. from the bottom flange of the steel joists. Hanger wires to be located adjacent to main runner/cross tee intersections.

b. **Cross Tees —** Nom 4 ft long, 1-1/2 in. wide face, installed perpendicular to the main runners, spaced 16 in. OC. Additional cross tees or cross channels used at 8 in. from each side of butted gypsum panel end joints. The cross tees or cross channels may be riveted or screw attached to the wall angle or channel to facilitate the ceiling installation.

c. **Cross Channels —** Nom 4 ft or 12 ft long, installed perpendicular to main runners, spaced 16 in. OC.

d. **Wall Angle or Channel —** Painted or galv steel angle with 1 in. legs or channel with 1 in. legs, 1-9/16 in. deep attached to walls at perimeter of ceiling with fasteners 16 in. OC. To support steel framing member ends and for screw-attachment of the gypsum panel.
CGC INC — Type DGL or RX

USG INTERIORS LLC — Type DGL or RX.

5B. **Steel Framing Members* —** (Optional, Not Shown) — As an alternate to Item 5 — Furring channels and Steel Framing Members as described below:
a. **Furring channels —** Formed of No. 25 MSG galv steel, 2-3/8 in. wide by 7/8 in. deep, spaced 12 in. OC, perpendicular to joists. Channel secured to joists as described in Item b. Ends of adjoining channels overlapped 6 in. and tied together with double strand of No. 18 SWG galv steel wire near each end of overlap. Additional channels shall be positioned so that the distance from the end of the board to the center of the first channel is 3 in. and from the board end to the center of the next channel is 12 in.

b. **Steel Framing Members* —** Used to attach furring channels (Item a) to joists (Item 2). Clips spaced 48 in. OC and secured to the bottom chord of joists with min 1-5/8 in. long No. 8 self-drilling, self-tapping, bugle, flat or hex head screw through the center grommet. Furring channels are friction fitted into clips. Additional clips required to hold furring channel that supports the gypsum board butt joints.
PLITEQ INC — Type Genie Clip

5C. **Alternate Steel Framing Members* —** (Optional, Not Shown) — As an alternate to Items 5 to 5B, furring channels and Steel Framing Members as described below.
a. **Furring channels —** Formed of No. 25 MSG galv steel. 2-9/16 in. or 2-23/32 in. wide by 7/8 in. deep, spaced 12 in. OC, perpendicular to joists. Channels secured to joists as described in Item b. Ends of adjoining channels overlapped 6 in. and tied together with double strand of No. 18 SWG galv steel wire near each end of overlap.

b. **Steel Framing Members* —** Used to attach furring channels (Item a) to the steel joists (Item 2). Clips spaced a max of 48 in. OC. RSIC-1 and RSIC-1 (2.75) clips secured to alternating joists with No. 8 x 2-1/2 in. coarse drywall screw through the center grommet. RSIC-Si-X secured to alternating

joints with No. 10 x 2-1/2 in. self drilling screws. Furring channels are friction fitted into clips. RSIC-1 clips for use with 2-9/16 in. wide furring channels. RSIC-1 (2.75) clips for use with 2-23/32 in. wide furring channels. Adjoining channels are overlapped as described in Item a. As an alternate, ends of adjoining channels may be overlapped 6 in. and secured together with two self-tapping No. 6 framing screws, min. 7/16 in. long at the midpoint of the overlap, with one screw on each flange of the channel. Additional clips required to hold furring channel that supports the wallboard butt joints, as described in Item 6.

PAC INTERNATIONAL L L C — Types RSIC-1, RSIC-Si-X or RSIC-1 (2.75)

5D. **Steel Framing Members* —** (Optional, Not Shown) — As an alternate to Item 5 — Furring channels and Steel Framing Members as described below:
a. **Furring channels —**
Formed of No. 25 MSG galv steel, 2-1/2 in. wide by 7/8 in. deep, spaced 12 in. OC, perpendicular to joists. Channel secured to joists as described in Item b.

b. **Steel Framing Members* —**
Used to attach furring channels (Item a) to the steel joists (Item 2). Clips spaced at 48 in. OC and secured to the bottom of the joists with one 2-1/2 in. Coarse Drywall Screw with 1 in. diam washer through the center hole. Furring channels are then friction fitted into clips. Ends of channels are overlapped 6" and tied together with double strand of No. 18 AWG galvanized steel wire. Additional clips are required to hold the Gypsum Butt joints as described in Item 6.

REGUPOL AMERICA — Type SonusClip

6. **Gypsum Board* —** One layer of nom 5/8 in. thick by 48 in. wide gypsum panels installed with long dimension perpendicular to resilient channels, furring channels or cross tees of suspension system. Gypsum panels secured to resilient/furring channels or drywall suspension system with 1 in. long Type S bugle-head screws spaced 8 in. OC, with screws located 4 in. from and on each side of the gypsum panel midspan, and 1-1/2 in. from side edges of the board. End joints secured to both resilient/furring channels as shown in end joint detail. When **Steel Framing Members** (Item 5B or 5C) are used, the butt joints in the gypsum board shall be supported by two furring channels. The two furring channels shall be spaced approximately 3-1/2 in. OC, and be attached to underside of the joist with one RSIC-1, RSIC-1 (2.75) or Genie clip at each end of the channel.
When **Steel Framing Members** (Item 5D) are used, one layer of nom 5/8 in. thick, 4 ft wide gypsum board is installed with long dimensions perpendicular to furring channels. Gypsum board secured to furring channels with nom 1 in. long Type S bugle-head steel screws spaced 8 in. OC in the field of the board. Gypsum board butted end joints shall be staggered minimum 48 in. and centered over main furring channels. At the gypsum board butt joints, an additional single length of furring channel shall be installed and be spaced approximately 3 in. from the butt joint (6 in. from the continuous furring channels) to support the floating end of the gypsum board. Each of these shorter sections of furring channel shall extend one joist beyond the width of the gypsum panel and be attached to the adjacent joists with one SonusClip at every joist involved with the butt joint.

CGC INC — Types C, IP-X2, IPC-AR, ULIX

NATIONAL GYPSUM CO — Type FSW-C

THE SIAM GYPSUM INDUSTRY (SONGKHLA) CO — Type C

UNITED STATES GYPSUM CO — Types C, IP-X2, IPC-AR, ULIX

USG BORAL DRYWALL SFZ LLC — Type C

USG MEXICO S A DE C V — Types C, IP-X2, IPC-AR

6A. **Gypsum Board* —** For use when Steel Framing Members* (Item 5A) are used - One layer of 5/8 in. thick, 4 ft wide, installed with long dimension perpendicular to cross tees with side edges centered over main runners and joints centered over cross tees or channels. Fastened to cross tees or channels with 1 in. long Type S screws bugle-head screws spaced 8 in. OC with the screws located 4 in. from the midspan of the cross tee or channel, and 1-1/2 in. from side edges of gypsum panel. Fastened to main runners with 1 in. long Type S bugle-head screws spaced midway between cross tees or channels. End joints of gypsum panels shall be staggered not less than 4 ft OC with adjacent gypsum panels end joints.
CGC INC — Types C, IP-X2, IPC-AR, ULIX

NATIONAL GYPSUM CO — Type FSW-C

THE SIAM GYPSUM INDUSTRY (SONGKHLA) CO — Type C

UNITED STATES GYPSUM CO — Types C, IP-X2, IPC-AR, ULIX

USG BORAL DRYWALL SFZ LLC — Type C

USG MEXICO S A DE C V — Types C, IP-X2, IPC-AR

7. **Finishing System - (Not Shown) —** Vinyl, dry or premixed joint compound, applied in two coats to joints and screw-heads. Nom 2 in. wide paper tape embedded in first layer of compound over all

joints. As an alternate, nom 3/32 in. thick veneer plaster may be applied to the entire surface of gypsum panels.

*** Indicates such products shall bear the UL or cUL Certification Mark for jurisdictions employing the UL or cUL Certification (such as Canada), respectively.**

Last Updated on 2021-06-11